# AWESOMATIX A800RR — SETUP SHEET

| | | | |
|---|---|---|---|
| NAME | Alexis BBB | DATE | 7 DEC 2025 |
| COUNTRY | | TEMP. °C AIR / TRACK | / |
| RACE | IRCR 2025 Round 2 | TRACK SURFACE | ASPHALT ☐ CARPET ☑ |
| TRACK | | TRACK LAYOUT | TECHNICAL ☐ MIXED ☑ FAST ☐ |
| | | TRACTION | LOW ☐ MEDIUM ☑ HIGH ☑ |

## FRONT

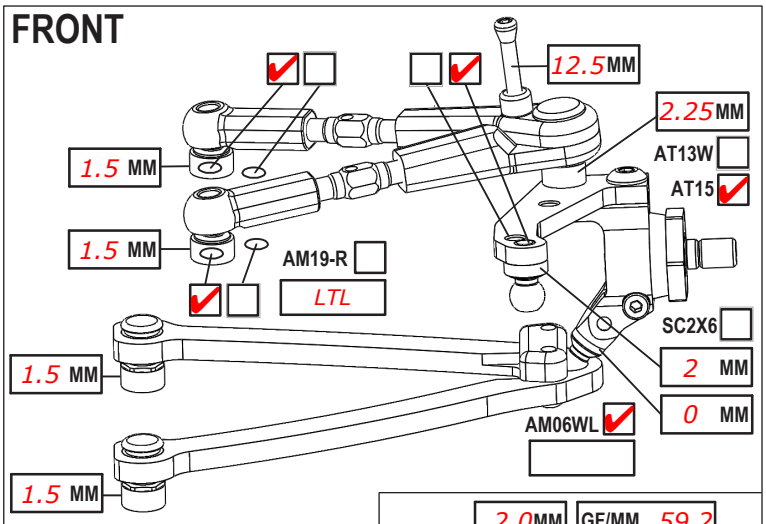


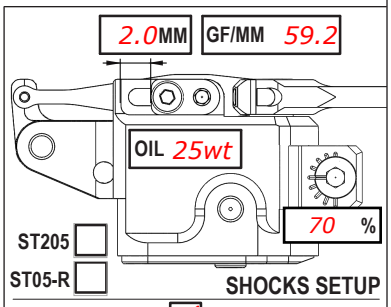


| | |
|---|---|
| CAMBER ANGLE / ° | -0.5 |
| CASTER ANGLE / ° | 3 |
| TOE ANGLE / ° | -1 |
| RIDE HEIGHT / MM | 5 |
| DOWNSTOP / MM | 5.8 |
| ANTI-ROLL BAR Ø / MM | 1.1 |
| ARB STIFFENER 1/4 ☐ 1/2 ☐ 3/4 ☐ 1 ☐ | |
| LOWER ARM EXTENSION / MM | 2 |
| STEER. ARM AM14LS ☑ | |
| 2ND SPRING SPR-P2 ☐ P1 ☐ | |
| WHEEL SPACER / MM | 0 |
| DRIVE SPOOL ☑ DIFF ☐ | |
| DRIVE POSITION DOWN ☐ UP ☑ +1 ☐ | |
| DIFF OIL | DIFF SHIMS |

| | |
|---|---|
| DAMPER D4 ☑ | |
| ROTOR 2 HOLES ☑ | |
| SPRING STD ☐ | S ☑ |
| SRS/RHS ARR. I ☑ | II ☐ |
| PSS SETUP 30% ☐ | 25% ☐ 15% ☐ |
| DAMPING LINEAR ☐ | P1 ☐ P2 ☑ |
| DAMPER SPACER / MM | 0 |
| C45 YES ☐ | NO ☑ |

## REAR

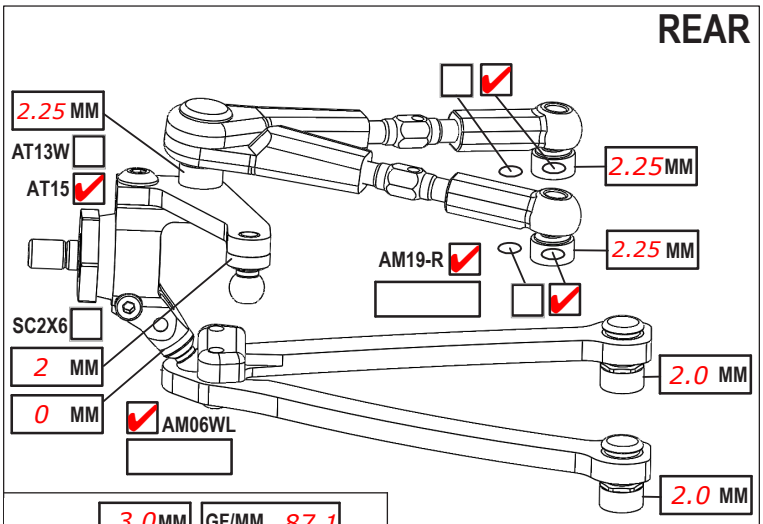


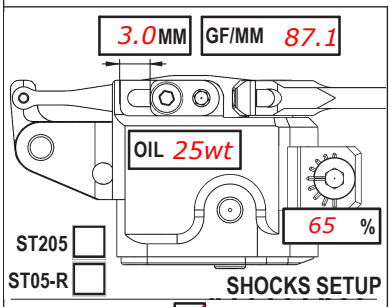


| | |
|---|---|
| CAMBER ANGLE / ° | -1.5 |
| CASTER ANGLE / ° | -3 |
| TOE ANGLE / ° | 1 |
| RIDE HEIGHT / MM | 5.2 |
| DOWNSTOP / MM | 4.8 |
| ANTI-ROLL BAR Ø / MM | 1.1 |
| ARB STIFFENER 1/4 ☐ 1/2 ☐ 3/4 ☐ 1 ☐ | |
| LOWER ARM EXTENSION / MM | 1 |
| STEER. ARM AM23-1 ☑ | |
| 2ND SPRING SPR-P2 ☐ P1 ☐ | |
| WHEEL SPACER / MM | 0 |
| DRIVE DIFF ☑ | |
| DRIVE POSITION DOWN ☐ UP ☑ +1 ☐ | |
| DIFF OIL 7.5k | DIFF SHIMS small |

| | |
|---|---|
| DAMPER D4 ☑ | |
| ROTOR 2 HOLES ☑ | |
| SPRING STD ☐ | S ☑ |
| SRS/RHS ARR. I ☑ | II ☐ |
| PSS SETUP 30% ☐ | 25% ☐ 15% ☐ |
| DAMPING LINEAR ☐ | P1 ☐ P2 ☑ |
| DAMPER SPACER / MM | 0 |
| C45 YES ☐ | NO ☑ |

## CHASSIS FLEX AND WEIGHT SETTINGS

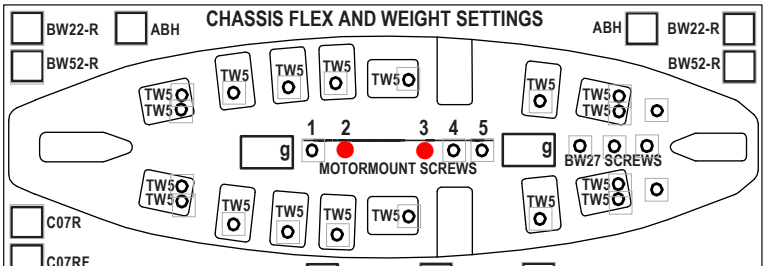


LOWER DECK C01B-RAF ☐ C01B-RC ☐ C01RS ☐ OTHER RMX ALU

BUMPER TOP PLATE CUT ☐ FRONT BUMPER P15L ☐ OTHER _____

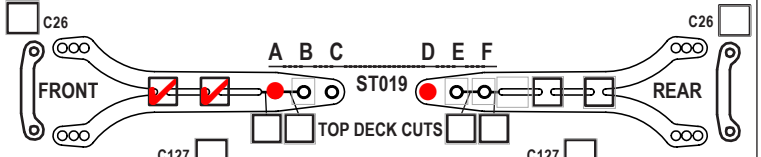


FRONT TOP DECK C127 ☐ C127S ☑ OTHER _____

REAR TOP DECK C127 ☐ C127S ☑ OTHER _____

SINGLE TOP DECK C27MMX ☐ OTHER _____ BELT TENSIONER AM279 ☐ OTHER _____

| | |
|---|---|
| TIRES | HUDY 28 |
| INSERTS | |
| SIDE WALLS GLUE Ø / MM F R | |
| ADDITIVE | MR33 V5 |
| TIME MIN. F 5min R x2 | |
| TOTAL WEIGHT | 1300 |
| WEIGHT DISTRIBUTION % F 48 R 52 | |

NOTES: "Le MR33 V5 c'est l'opium du peuple" (Anthony Rheinard)

| | | | |
|---|---|---|---|
| MOTOR LATERAL SHIFT / MM | 0 | SERVO | S15 |
| MOTOR | G4R 17.5t | SERVOHORN / HEIGHT | 18mm |
| SPUR 104 PINION 38 RATIO | 5.20 | ACKERMANN POSITION | Middle |
| BODY | Wolverine 0.5mm | STEER TRAVEL IN OUT | 16 |
| WING | Twister OG 0.5mm | BATTERY | EAM 6000 |
| ESC | XR10 | RECEIVER | |
| ESC SETTING | 52° Boost [2.5K>22.5K] | RADIO | |
| BEST LAPTIME | | QUALIF./FINAL POSITION | / 5 |

## BODY POSITION

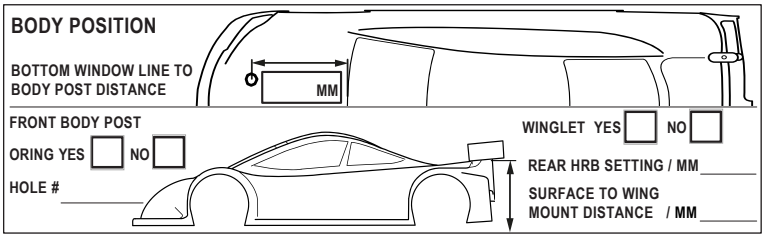


COMMENTS:

Huiles Axon dans diff / amortos
150mg de caféine dans le pilote